REV.	DESCRIPTION	DATE	DRAFTER	APPROVER
A1	DWG.REL	2020.05.18	LiuZH	JIN

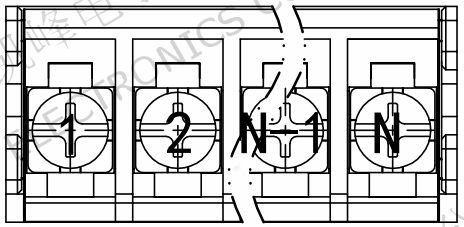

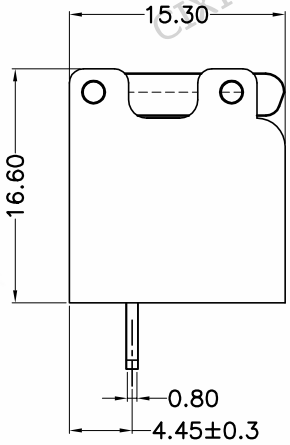

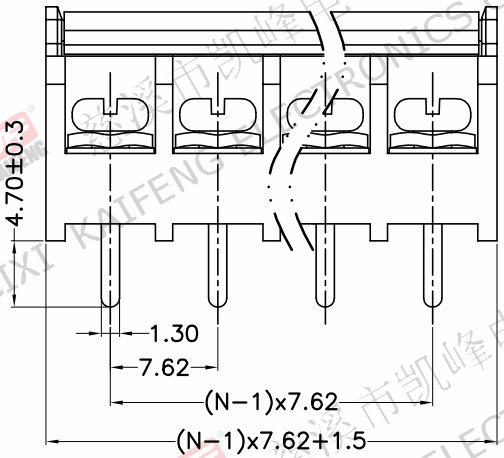

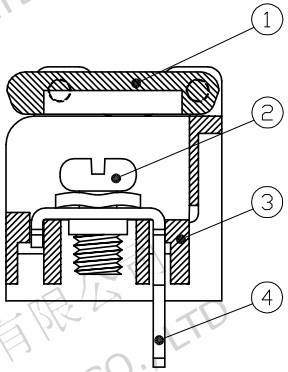

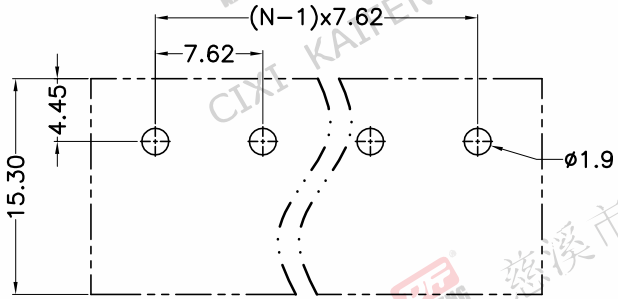

P.C.B.LAYOUT

- Material
  ①Cover : PC
  ②Screws : M3.5 steel, Ni plated
  ③Housing : PA66,UL94V-0
  ④Terminal : Brass, Tin plated

- Electrical

	UL	IEC
Rated voltage :	300V	450V
Rated current :	15A	24A

  Contact resistance : 20mΩ(Max)
  Insulation resistance: 500MΩ/DC500V
  Withstanding Voltage : AC2000V/1min
  Wire range: 22-14AWG 2.5mm²

- Mechanical
  Operating temperature:-40℃∽+105℃
  Soldering temperature:250℃±5/5sec
  Torque: 0.8N.m (7.02Lb.in)

- RoHS compliance

HOW TO ORDER

HB-762M-7.62-XXP-1 X-XXXXX

- HB-762M: MODEL
- 7.62: Pitch:mm
- XXP: No.of poles: 2~24P
- 1: 1:Single Pitch, 2:Double Pitch
- X: Color: G:Green, K:Black, O:Orange, GR:Gray, R:Red, W:White, B:Blue
- XXXXX: Customer Request

Pitch range			Nominal dimension range						
>0 ~ 6	>6 ~ 10	>10 ~ 24	>0 ~ 30	>30 ~ 60	>60 ~ 100	>100 ~ 150	>150		0.1/10
±0.15	±0.20	±0.30	±0.30	±0.50	±0.70	±1.00	±1.30		±2°

DRAWING TYPE	CUSTOMER DRAWING		
SCALE	1:1	SHEET	1 OF 1
DRAWING NO.	W12000102		

PROJECTION		TITLE	HB-762M-7.62-XXP-1X
UNIT	mm		
SHEET SIZE	A4	SERIES	HB-762M

慈溪市凯峰电子有限公司
CIXI KAIFENG ELECTRONICS CO.,LTD